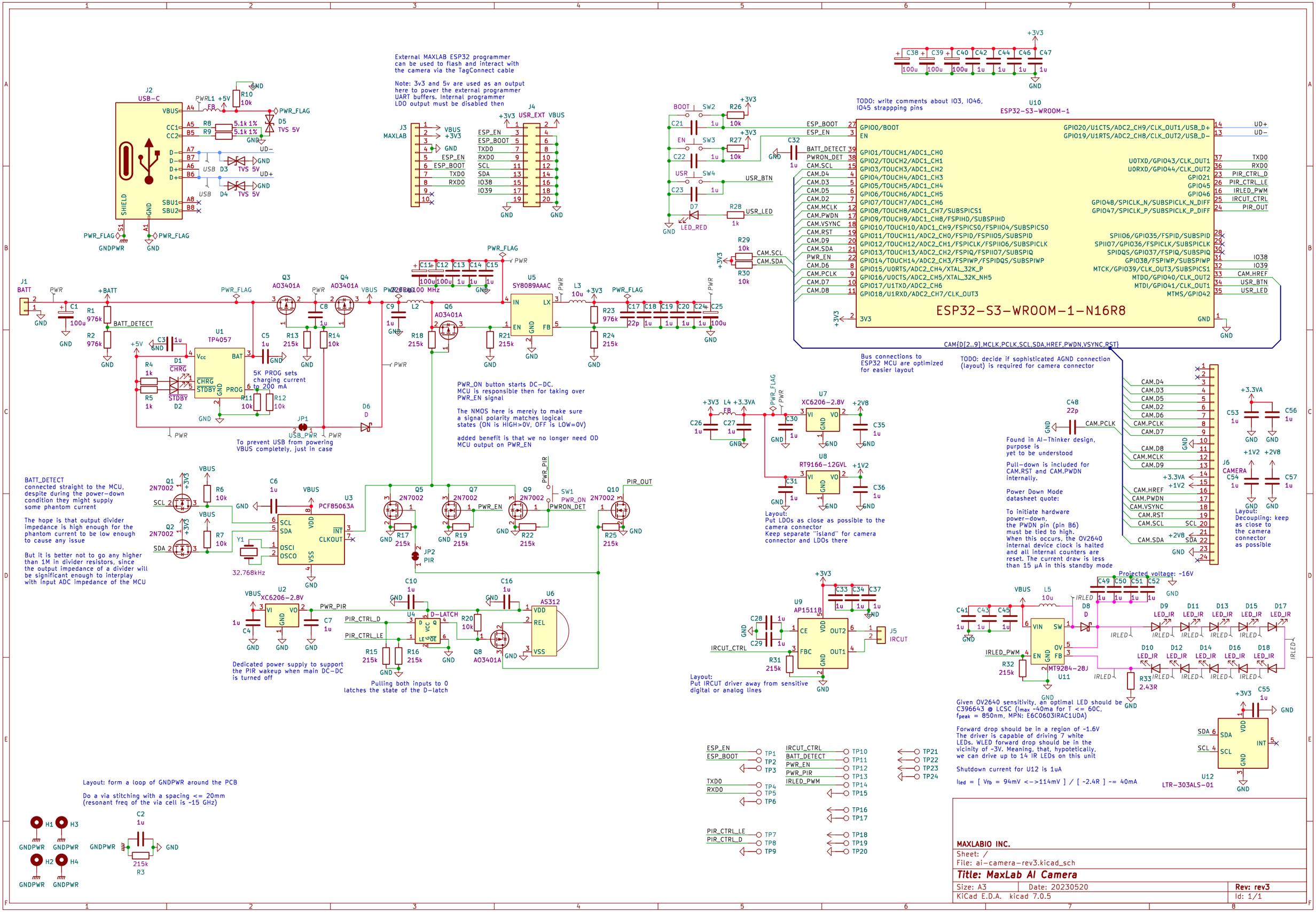
External MAXLAB ESP32 programmer can be used to flash and interact with the camera via the TagConnect cable
Note: 3v3 and 5v are used as an output here to power the external programmer UART buffers. Internal programmer LDO output must be disabled then
J2 USB-C
J3 MAXLAB
J4 USR_EXT
U10 ESP32-S3-WROOM-1
ESP32-S3-WROOM-1-N16R8
TODO: write comments about IO3, IO46, IO45 strappping pins
J1 BATT
Q3 AO3401A
Q4 AO3401A
U5 SY8089AAAC
U1 TP4057
5K PROG sets charging current to 200 mA
To prevent USB from powering VBUS completely, just in case
PWR_ON button starts DC-DC. MCU is responsible then for taking over PWR_EN signal
The NMOS here is merely to make sure a signal polarity matches logical states (ON is HIGH>0V, OFF is LOW=0V)
added benefit is that we no longer need OD MCU output on PWR_EN
Bus connections to ESP32 MCU are optimized for easier layout
TODO: decide if sophisticated AGND connection (layout) is required for camera connector
CAM{D[2..9],MCLK,PCLK,SCL,SDA,HREF,PWDN,VSYNC,RST}
U7 XC6206-2.8V
U8 RT9166-12GVL
Layout: Put LDOs as close as possible to the camera connector Keep separate "island" for camera connector and LDOs there
Found in AI-Thinker design, purpose is yet to be understood
Pull-down is included for CAM.RST and CAM.PWDN internally.
Power Down Mode datasheet quote:
To initiate hardware power-down, the PWDN pin (pin B6) must be tied to high. When this occurs, the OV2640 internal device clock is halted and all internal counters are reset. The current draw is less than 15 µA in this standby mode
J6 CAMERA
Layout: Decoupling: keep as close to the camera connector as possible
BATT_DETECT connected straight to the MCU, despite during the power-down condition they might supply some phantom current
The hope is that output divider impedance is high enough for the phantom current to be low enough to cause any issue
But it is better not to go any higher than 1M in divider resistors, since the output impedance of a divider will be significant enough to interplay with input ADC impedance of the MCU
U3 PCF85063A
32.768kHz
U2 XC6206-2.8V
Dedicated power supply to support the PIR wakeup when main DC-DC is turned off
U4 D-LATCH
Pulling both inputs to 0 latches the state of the D-latch
U6 AS312
U9 AP1511B
J5 IRCUT
Layout: Put IRCUT driver away from sensitive digital or analog lines
Projected voltage: ~16V
U11 MT9284-28J
Given OV2640 sensitivity, an optimal LED should be C396643 @ LCSC (Imax ~40ma for T <= 60C, fpeak = 850nm, MPN: E6C0603IRAC1UDA)
Forward drop should be in a region of ~1.6V The driver is capable of driving 7 white LEDs. WLED forward drop should be in the vicinity of ~3V. Meaning, that, hypotetically, we can drive up to 14 IR LEDs on this unit
Shutdown current for U12 is 1uA
Iled = [Vfb = 94mV <->114mV] / [~2.4R] ~= 40mA
U12 LTR-303ALS-01
Layout: form a loop of GNDPWR around the PCB
Do a via stitching with a spacing <= 20mm (resonant freq of the via cell is ~15 GHz)
MAXLABIO INC.
Sheet: /
File: ai-camera-rev3.kicad_sch
Title: MaxLab AI Camera
Size: A3
Date: 20230520
Rev: rev3
KiCad E.D.A. kicad 7.0.5
Id: 1/1