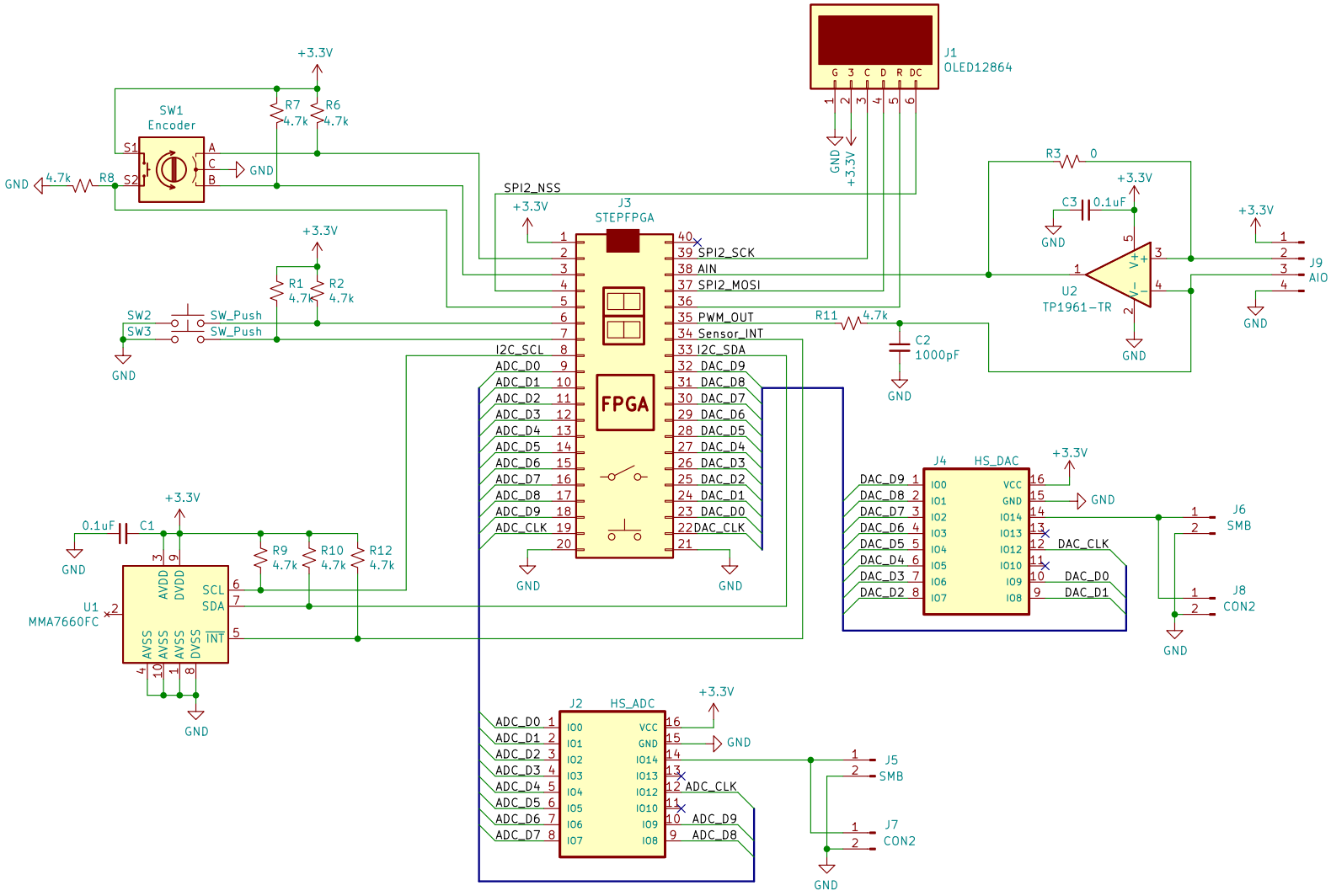

H1 Hole_2mm

H2 Hole_2mm

H3 Hole_2mm

H4 Hole_2mm

Logo N1 National Contest

Logo N2 EETree_Text

Logo N3 EETree_Logo

Designed for StepFPGA & UP5K/MCU board

EETree Info & Tech Limited

Sheet: /

File: UP5K_EVA.sch

Title: National Contest Training Board

Size: A4	Date: 2021-03-21	**Rev: V1.0**
KiCad E.D.A. kicad (5.1.8)-1		Id: 1/1